I.J. Intelligent Systems and Applications, 2013, 11, 34-46
Published Online October 2013 in MECS (http://www.mecs-press.org/)
DOI: 10.5815/ijisa.2013.11.04

Artificial Error Tuning Based on Design a Novel SISO Fuzzy Backstepping Adaptive Variable Structure Control

Samaneh Zahmatkesh
Research and Development Unit, Electrical and Electronic Researcher, SSP. Co, Shiraz, Iran
E-mail: SSP.ROBOTIC@yahoo.com

Farzin Piltan
Senior Researcher at Research and Development Unit, SanatkadeheSabze Pasargad Company, (S.S.P. Co), Shiraz, Iran
E-mail: Piltan_f@iranssp.com

Kamran Heidari
Research and Development Unit, Electrical and Electronic Researcher, SSP. Co, Shiraz, Iran
E-mail: SSP.ROBOTIC@yahoo.com

Mohammad Shamsodini
Research and Development Unit, Electrical and Electronic Researcher, SSP. Co, Shiraz, Iran
E-mail: SSP.ROBOTIC@yahoo.com

Sara Heidari
Research and Development Unit, Electrical and Electronic Researcher, SSP. Co, Shiraz, Iran
E-mail: SSP.ROBOTIC@yahoo.com

***Abstract*—** This paper examines single input single output (SISO) chattering free variable structure control (VSC) which controller coefficient is on-line tuned by fuzzy backstepping algorithm to control of continuum robot manipulator. Variable structure methodology is selected as a framework to construct the control law and address the stability and robustness of the close loop system based on Lyapunove formulation. The main goal is to guarantee acceptable error result and adjust the trajectory following. The proposed approach effectively combines the design technique from variable structure controller is based on Lyapunov and modified Proportional plus Derivative (P+D) fuzzy estimator to estimate the nonlinearity of undefined system dynamic in backstepping controller. The input represents the function between variable structure function, error and the modified rate of error. The outputs represent joint torque, respectively. The fuzzy backstepping methodology is on-line tune the variable structure function based on adaptive methodology. The performance of the SISO VSC based on-line tuned by fuzzy backstepping algorithm (FBSAVSC) is validated through comparison with VSC. Simulation results signify good performance of trajectory in presence of uncertainty joint torque load.

***Index Terms*—** Continuum Robot, Fuzzy Logic Controller, Variable Structure Controller, Backstepping Controller, Adaptive Methodology, Lyapunov Based Controller

I. Introduction

Modeling of an entire continuum robot manipulator is very important and complicated process because robot manipulators are nonlinear, multi inputs-multi outputs (MIMO) and time variant. Robot manipulators have many applications in aerospace, manufacturing, automotive, medicine and other industries. Robot manipulators consist of three main parts: mechanical, electrical, and control. In the mechanical point of view, robot manipulators are collection of serial or parallel links which have connected by revolute and/or prismatic joints between base and end-effector frame. The robot manipulators electrical parts are used to run the controllers, actuators for links motion and sensors, which including the following subparts: power supply to supply the electrical and control parts, power amplifier to amplify the signal and driving the actuators, DC/stepper/servo motors or hydraulic/pneumatic cylinders to move the links, and transmission part to transfer data between robot manipulator subparts [8-15].

Copyright © 2013 MECS

Based on mechanical and control methodologies research in robotic system, mechanical design, type of actuators and type of systems drive play important roles to have the best performance controller. A serial link robot is a sequence of joints and links which begins with a base frame and ends with an end-effector. This type of robot manipulators, comparing with the load capacity is more weightily because each link must be supported the weights of all next links and actuators between the present link and end-effector [1-7]. Serial robot manipulators have been used in automotive industry, medical application, and also in research laboratories [6-15]. Continuum robots represent a class of robots that have a biologically inspired form characterized by flexible backbones and high degrees-of-freedom structures [16-20].

Controller (control system) is a device which can sense information from linear or nonlinear system (e.g., robot) to improve the systems performance [3-20]. In feedback control system considering that there are many disturbances and also variable dynamic parameters something that is really necessary is keeping plant variables close to the desired value. Feedback control system development is the most important thing in many different fields of engineering. The main targets in design control systems are stability, good disturbance rejection, and small tracking error[21-37]. At present, in some applications robots are used in unknown and unstructured environment, therefore strong mathematical tools used in new control methodologies to design nonlinear robust controller with an acceptable performance (e.g., minimum error, good fuel ratio, torque load rejection). One of the best nonlinear robust controllers is variable structure control which is used in nonlinear uncertain systems. One of the nonlinear robust controllers is variable structure controller, although this controller has been analyzed by many researchers but the first proposed was in the 1950 [31-38]. Even though, this controller is used in wide range areas but, pure variable structure controller has two drawbacks: Firstly, output oscillation (chattering); which caused the heating in the mechanical parameters. Secondly, nonlinear dynamic formulation of nonlinear systems which applied in nonlinear dynamic nonlinear controller; calculate this control formulation is absolutely difficult because it depends on the dynamic nonlinear system's equation [20-23]. Neural network, fuzzy logic, and neuro-fuzzy are synergically combined with nonlinear classical controller and used in nonlinear, time variant, and uncertainty plant. Fuzzy logic controller (FLC) is one of the most important applications of fuzzy logic theory [30-38]. This controller can be used to control nonlinear, uncertain, and noisy systems. This method is free of some model-based techniques as in classical controllers. As mentioned that fuzzy logic application is not only limited to the modelling of nonlinear systems [31-38]but also this method can help engineers to design easier controller. Control engine using classical controllers are based on system's dynamic modelling. These controllers often have many problems for modelling. Conventional controllers require accurate information of dynamic model of robot. When the system model is unknown or when it is known but complicated, it is difficult or impossible to use classical mathematics to process this model[32]. The main reasons to use fuzzy logic technology are able to give approximate recommended solution for unclear and complicated systems to easy understanding and flexible. Fuzzy logic provides a method which is able to model a controller for nonlinear plant with a set of IF-THEN rules, or it can identify the control actions and describe them by fuzzy rules [32-38]. In various dynamic parameters systems that need to be training on-line adaptive control methodology is used. Fuzzy adaptive method is used in systems which want to training parameters by expert knowledge. Traditional adaptive method is used in systems which some dynamic parameters are known. In this research in order to solve disturbance rejection and uncertainty dynamic parameter, adaptive method is applied to variable structure controller. Continuum robot manipulator is highly nonlinear and most of dynamic parameters are uncertain. Variable structure controller is one of the best choices to control of this system but it has challenge such as chattering phenomenon, equivalent part and error in uncertain system. The modified P plus D is used to reduce the chattering and estimate the nonlinear and uncertain dynamic parameters. Online tuning methodology based on fuzzy backstepping technique is used to reduce the error in uncertain system and eliminate the chattering. This paper is organized as follows:

Detail of classical sliding mode controller and dynamic formulation of flexible continuum robot manipulator are presented in section 2, theory. In section 3, methodology, design adaptive fuzzy sliding mode controller based on backstepping methodology is presented. In section 4, the simulation result is presented and finally in section 5, the conclusion is presented

II. Theory

Mathematical Modeling of Continuum Robot Manipulator Based on Euler Lagrange: The Continuum section analytical model developed here consists of three modules stacked together in series. In general, the model will be a more precise replication of the behavior of a continuum arm with a greater of modules included in series. However, we will show that three modules effectively represent the dynamic behavior of the hardware, so more complex models are not motivated. Thus, the constant curvature bend exhibited by the section is incorporated inherently within the model. The model resulting from the application of Lagrange's equations of motion obtained for this system can be represented in the form

$$\boldsymbol{F_{coeff}}\ \underline{\boldsymbol{\tau}} = \boldsymbol{D}\left(\underline{\boldsymbol{q}}\right)\underline{\ddot{\boldsymbol{q}}} + \boldsymbol{C}\left(\underline{\boldsymbol{q}}\right)\underline{\dot{\boldsymbol{q}}} + \boldsymbol{G}\left(\underline{\boldsymbol{q}}\right) \tag{1}$$

where τ is a vector of input forces and q is a vector of generalized co-ordinates. The force coefficient matrix F_{coeff} transforms the input forces to the generalized forces and torques in the system. The inertia matrix, D is composed of four block matrices. The block matrices that correspond to pure linear accelerations and pure angular accelerations in the system (on the top left and on the bottom right) are symmetric. The matrix C contains coefficients of the first order derivatives of the generalized co-ordinates. Since the system is nonlinear, many elements of C contain first order derivatives of the generalized co-ordinates. The remaining terms in the dynamic equations resulting from gravitational potential energies and spring energies are collected in the matrix G. The coefficient matrices of the dynamic equations are given below,

$$\boldsymbol{Fcoeff} = \begin{bmatrix} 1 & 1 & cos(\theta_1) & cos(\theta_1) & cos(\theta_1+\theta_2) & cos(\theta_1+\theta_2) \\ 0 & 0 & 1 & 1 & cos(\theta_2) & cos(\theta_2) \\ 0 & 0 & 0 & 0 & 1 & 1 \\ 1/2 & -1/2 & 1/2 & -1/2 & 1/2+s_2sin(\theta_2) & -1/2+s_2sin(\theta_2) \\ 0 & 0 & 1/2 & -1/2 & 1/2 & -1/2 \\ 0 & 0 & 0 & 0 & 1/2 & -1/2 \end{bmatrix} \tag{2}$$

$$\boldsymbol{D}\left(\underline{\boldsymbol{q}}\right) = \begin{bmatrix} \boldsymbol{m_1+m_2+m_3} & \boldsymbol{m_2cos(\theta_1)+m_3cos(\theta_1)} & \boldsymbol{m_3cos(\theta_1+\theta_2)} & \boldsymbol{-m_2s_2sin(\theta_1)-m_3s_2sin(\theta_1)-m_3s_3sin(\theta_1+\theta_2)} & \boldsymbol{-m_3s_3sin(\theta_1+\theta_2)} & \boldsymbol{0} \\ \boldsymbol{m_2cos(\theta_1)+m_3cos(\theta_1)} & \boldsymbol{m_2+m_3} & \boldsymbol{m_3cos(\theta_2)} & \boldsymbol{-m_3s_3sin(\theta_2)} & \boldsymbol{-m_3s_3sin(\theta_2)} & \boldsymbol{0} \\ \boldsymbol{m_3cos(\theta_1+\theta_2)} & \boldsymbol{m_3cos(\theta_2)} & \boldsymbol{m_3} & \boldsymbol{m_3s_3sin(\theta_2)} & \boldsymbol{0} & \boldsymbol{0} \\ \boldsymbol{-m_2s_2sin(\theta_1)-m_3s_2sin(\theta_1)-m_3s_3sin(\theta_1+\theta_2)} & \boldsymbol{-m_3s_3sin(\theta_2)} & \boldsymbol{m_3s_2sin(\theta_2)} & \boldsymbol{m_2s_2^2+I_1+I_2+I_3+m_3s_2^2+m_3s_3^2+2m_3s_3cos(\theta_2)s_2} & \boldsymbol{I_2+m_3s_3^2+I_3+m_3s_3cos(\theta_2)s_2} & \boldsymbol{I_3} \\ \boldsymbol{-m_3s_3sin(\theta_1+\theta_2)} & \boldsymbol{-m_3s_3sin(\theta_2)} & \boldsymbol{0} & \boldsymbol{I_2+m_3s_3^2+I_3+m_3s_3cos(\theta_2)s_2I} & \boldsymbol{I_2+m_3s_3^2+I_3} & \boldsymbol{I_3} \\ \boldsymbol{0} & \boldsymbol{0} & \boldsymbol{0} & \boldsymbol{I_3} & \boldsymbol{I_3} & \boldsymbol{I_3} \end{bmatrix} \tag{3}$$

$$\boldsymbol{C}\left(\underline{\boldsymbol{q}}\right) = \begin{bmatrix} c_{11}+c_{21} & -2m_2sin(\theta_1)\dot{\theta}_1-2m_3sin(\theta_1)\dot{\theta}_1 & -2m_3sin(\theta_1+\theta_2)(\dot{\theta}_1+\dot{\theta}_2) & -m_2s_2cos(\theta_1)(\dot{\theta}_1)+(1/2)(c_{11}+c_{21})-m_3s_2cos(\theta_1)(\dot{\theta}_1)-m_3s_3cos(\theta_1+\theta_2)(\dot{\theta}_1) & -m_3s_3sin(\theta_1+\theta_2) & 0 \\ 0 & c_{12}+c_{22} & -2m_3sin(\theta_2)(\dot{\theta}_1+\dot{\theta}_2) & -m_3s_3(\dot{\theta}_1)+(1/2)(c_{12}+c_{22})-m_3s_2(\dot{\theta}_1)-m_3s_3cos(\theta_2)(\dot{\theta}_1) & -2m_3s_3cos(\theta_2)(\dot{\theta}_1)-m_3s_3cos(\theta_2)(\dot{\theta}_2) & 0 \\ 0 & 2m_3sin(\theta_2)(\dot{\theta}_1) & c_{13}+c_{23} & -m_3s_3s_2cos(\theta_2)(\dot{\theta}_1)-m_3s_3(\dot{\theta}_1) & -2m_3s_3(\dot{\theta}_1)-m_3s_3(\dot{\theta}_2) & (1/2)(c_{13}+c_{23}) \\ (1/2)(c_{11}+c_{21}) & 2m_3s_3cos(\theta_2)(\dot{\theta}_1)-2m_3s_2(\dot{\theta}_1)+2m_2s_2(\dot{\theta}_1) & 2m_3s_3(\dot{\theta}_1+\dot{\theta}_2)-2m_3s_2cos(\theta_2)(\dot{\theta}_1+\dot{\theta}_2) & 2m_3s_3s_2sin(\theta_2)(\dot{\theta}_2)+(1^2/4)(c_{11}+c_{21}) & m_3s_3s_2sin(\theta_2)(\dot{\theta}_2) & 0 \\ 0 & (1/2)(c_{12}+c_{22})+2m_3s_3cos(\theta_2)(\dot{\theta}_1) & 2m_3s_3(\dot{\theta}_1+\dot{\theta}_2) & m_3s_3s_2sin(\theta_2)(\dot{\theta}_1) & (1^2/4)(c_{12}+c_{22}) & 0 \\ 0 & 0 & (1/2)(c_{13}-c_{23}) & 0 & 0 & (1^2/4)(c_{13}+c_{23}) \end{bmatrix} \tag{4}$$

$$G\left(\underline{q}\right)=\begin{bmatrix} -m_1g-m_2g+k_{11}(s_1+(1/2)\theta_1-s_{01})+k_{21}(s_1-(1/2)\theta_1-s_{01})-m_3g \\ -m_2gcos(\theta_1)+k_{12}(s_2+(1/2)\theta_2-s_{02})+k_{22}(s_2-(1/2)\theta_2-s_{02})-m_3gcos(\theta_1) \\ -m_3gcos(\theta_1+\theta_2)+k_{13}(s_3+(1/2)\theta_3-s_{03})+k_{23}(s_3-(1/2)\theta_3-s_{03}) \\ m_2s_2gsin(\theta_1)+m_3s_3gsin(\theta_1+\theta_2)+m_3s_2gsin(\theta_1)+k_{11}(s_1+(1/2)\theta_1-s_{01})(1/2) \\ +k_{21}(s_1-(1/2)\theta_1-s_{01})(-1/2) \\ m_3s_3gsin(\theta_1+\theta_2)+k_{12}(s_2+(1/2)\theta_2-s_{02})(1/2)+k_{22}(s_2-(1/2)\theta_2-s_{02})(-1/2) \\ k_{13}(s_3+(1/2)\theta_3-s_{03})(1/2)+k_{23}(s_3-(1/2)\theta_3-s_{03})(-1/2) \end{bmatrix} \quad (5)$$

Sliding Mode methodology: Sliding mode controller (SMC) is a powerful nonlinear controller which has been analyzed by many researchers especially in recent years. This theory was first proposed in the early 1950 by Emelyanov and several co-workers and has been extensively developed since then with the invention of high speed control devices[10-38]. The sliding mode control law for a multi degrees of freedom robot manipulator is written as:

$$\hat{\boldsymbol{\tau}}=\hat{\boldsymbol{\tau}}_{eq}+\hat{\boldsymbol{\tau}}_{dis} \quad (6)$$

Where $\hat{\boldsymbol{\tau}}_{dis}$ is a simple solution to get the sliding condition when the dynamic parameters have uncertainty and it is calculated by the following formulation;

$$\boldsymbol{\tau}_{dis}=\boldsymbol{K_1}(\vec{\boldsymbol{e}},\boldsymbol{t}).\boldsymbol{sgn}(\boldsymbol{s})+\boldsymbol{K_2}(\vec{\boldsymbol{e}},\boldsymbol{t})\times\boldsymbol{S}+\boldsymbol{K_3}\int\boldsymbol{S} \quad (7)$$

Where the function of $\boldsymbol{sgn}(\boldsymbol{S})$ defined as;

$$\boldsymbol{sgn}(\boldsymbol{s})=\begin{cases}\mathbf{1} & \boldsymbol{s}>0\\ -\mathbf{1} & \boldsymbol{s}<0\\ \mathbf{0} & \boldsymbol{s}=\mathbf{0}\end{cases} \quad (8)$$

and the $\boldsymbol{K}(\vec{\boldsymbol{e}},\boldsymbol{t})$ is the positive constant and sliding surface ($\boldsymbol{S}$) is calculated by the following.

$$\boldsymbol{s}(\boldsymbol{e},\boldsymbol{t})=\frac{\boldsymbol{d}}{\boldsymbol{dt}}\times\mathbf{e}+\boldsymbol{\lambda e} \quad (9)$$

The equivalent part of this controller is used to fine tuning the trajectory and calculated

$$\hat{\boldsymbol{\tau}}_{eq}=\left[\boldsymbol{D}^{-1}(\boldsymbol{f}+\boldsymbol{C}+\boldsymbol{G})+\dot{\boldsymbol{S}}\right]\boldsymbol{D} \quad (10)$$

Where nonlinear a term of torque is $\boldsymbol{\tau}_{eq}$, $\boldsymbol{M}(\boldsymbol{q})$ is a symmetric and positive define inertia matrix, the matrix of coriolios torque is $\boldsymbol{B}(\boldsymbol{q})$, $\boldsymbol{C}(\boldsymbol{q})$ is the matrix of centrifugal torque, $\boldsymbol{G}(\boldsymbol{q})$ is the vector of gravity force and the derivation of $\boldsymbol{S}$ is $\dot{\boldsymbol{S}}$.

To reduce or eliminate the chattering it is used the boundary layer method; in boundary layer method the basic idea is replace the discontinuous method by saturation (linear) method with small neighborhood of the switching surface.

$$\boldsymbol{B}(\boldsymbol{t})=\{\boldsymbol{x},|\boldsymbol{S}(\boldsymbol{t})|\leq\emptyset\};\emptyset>0 \quad (11)$$

Where $\emptyset$ is the boundary layer thickness. Therefore, to have a smote control law, the saturation function $\boldsymbol{Sat}(\boldsymbol{S}/_{\emptyset})$ added to the control law:

$$\boldsymbol{\tau}_{sat}=\boldsymbol{K}(\boldsymbol{e},\boldsymbol{t}).\boldsymbol{Sat}\left(\boldsymbol{S}/_{\emptyset}\right) \quad (12)$$

Where $\boldsymbol{Sat}\left(\boldsymbol{S}/_{\emptyset}\right)$ can be defined as

$$\boldsymbol{sat}\left(\boldsymbol{S}/_{\emptyset}\right)=\begin{cases}\mathbf{1} & (\boldsymbol{s}/_{\emptyset}>1)\\ -\mathbf{1} & \left(\boldsymbol{s}/_{\emptyset}<1\right)\\ \boldsymbol{s}/_{\emptyset} & (-\mathbf{1}<\boldsymbol{s}/_{\emptyset}<1)\end{cases} \quad (13)$$

Figure 1 shows the position classical sliding mode control for robot manipulator. By (13) and (10) the sliding mode control of robot manipulator is calculated as;

$$\hat{\boldsymbol{\tau}}=\left[\boldsymbol{D}^{-1}(\boldsymbol{f}+\boldsymbol{C}+\boldsymbol{G})+\dot{\boldsymbol{S}}\right]\boldsymbol{D}+\boldsymbol{K}.\boldsymbol{sat}\left(\boldsymbol{S}/_{\emptyset}\right) \quad (14)$$

Fuzzy Logic Theory: This section provides a review about foundation of fuzzy logic based on [10-38]. Supposed that U is the universe of discourse and x is the element of U, therefore, a crisp set can be defined as a set which consists of different elements (x) will all or no membership in a set. A fuzzy set is a set that each element has a membership grade, therefore it can be written by the following definition;

$$\boldsymbol{A}=\{\boldsymbol{x},\boldsymbol{\mu_A}(\boldsymbol{x})|\boldsymbol{x}\in\boldsymbol{X}\};\boldsymbol{A}\in\boldsymbol{U} \quad (15)$$

Where an element of universe of discourse is x, μ_A is the membership function (MF) of fuzzy set. The membership function ($\mu_A(x)$) of fuzzy set A must have a value between zero and one. If the membership

function $\mu_A(x)$ value equal to zero or one, this set change to a crisp set but if it has a value between zero and one, it is a fuzzy set. Defining membership function for fuzzy sets has divided into two main groups; namely; numerical and functional method, which in numerical method each number has different degrees of membership function and functional method used standard functions in fuzzy sets. The membership function which is often used in practical applications includes triangular form, trapezoidal form, bell-shaped form, and Gaussian form.

Linguistic variable can open a wide area to use of fuzzy logic theory in many applications (e.g., control and system identification). In a natural artificial language all numbers replaced by words or sentences. $If - then$ Rule statements are used to formulate the condition statements in fuzzy logic. A single fuzzy $If - then$ rule can be written by

$$\boldsymbol{If\ x\ is\ A\ Then\ y\ is\ B} \tag{16}$$

where A and B are the Linguistic values that can be defined by fuzzy set, the $If - part$ of the part of *"x is A"* is called the antecedent part and the $then - part$ of the part of *"y is B"* is called the Consequent or Conclusion part. The antecedent of a fuzzy if-then rule can have multiple parts, which the following rules shows the multiple antecedent rules:

$$\boldsymbol{if\ e\ is\ NB\ and\ \dot{e}\ is\ ML\ then\ T\ is\ LL} \tag{17}$$

where e is error, $\dot{e}$ is change of error, NB is Negative Big, ML is Medium Left, T is torque and LL is Large Left. $If - then$ rules have three parts, namely, fuzzify inputs, apply fuzzy operator and apply implication method which in fuzzify inputs the fuzzy statements in the antecedent replaced by the degree of membership, apply fuzzy operator used when the antecedent has multiple parts and replaced by single number between 0 to 1, this part is a degree of support for the fuzzy rule, and apply implication method used in consequent of fuzzy rule to replaced by the degree of membership. The fuzzy inference engine offers a mechanism for transferring the rule base in fuzzy set which it is divided into two most important methods, namely, Mamdani method and Sugeno method. Mamdani method is one of the common fuzzy inference systems and he designed one of the first fuzzy controllers to control of system engine. Mamdani's fuzzy inference system is divided into four major steps: fuzzification, rule evaluation, aggregation of the rule outputs and defuzzification. Michio Sugeno uses a singleton as a membership function of the rule consequent part. The following definition shows the Mamdani and Sugeno fuzzy rule base

$$\begin{aligned} &\boldsymbol{Mamdani\quad F.R^1: if\quad x\ is\ A\ and\ y\ is\ B\quad then\quad z\ is\ C} \\ &\boldsymbol{Sugeno\quad F.R^1: if\quad x\ is\ A\ and\ y\ is\ B\quad then\quad f(x,y) is\ C} \end{aligned} \tag{18}$$

When x and y have crisp values fuzzification calculates the membership degrees for antecedent part. Rule evaluation focuses on fuzzy operation (AND/OR) in the antecedent of the fuzzy rules. The aggregation is used to calculate the output fuzzy set and several methodologies can be used in fuzzy logic controller aggregation, namely, Max-Min aggregation, Sum-Min aggregation, Max-bounded product, Max-drastic product, Max-bounded sum, Max-algebraic sum and Min-max. Two most common methods that used in fuzzy logic controllers are Max-min aggregation and Sum-min aggregation. Max-min aggregation defined as below

$$\begin{aligned} \boldsymbol{\mu_U(x_k,y_k,U)} &= \boldsymbol{\mu_{\cup_{i=1}^{r} FR^i}(x_k,y_k,U)} \\ &= \boldsymbol{\max\left\{\min_{i=1}^{r}\left[\mu_{R_{pq}}(x_k,y_k),\mu_{p_m}(U)\right]\right\}} \end{aligned} \tag{19}$$

The Sum-min aggregation defined as below

$$\begin{aligned} \boldsymbol{\mu_U(x_k,y_k,U)} &= \boldsymbol{\mu_{\cup_{i=1}^{r} FR^i}(x_k,y_k,U)} \\ &= \boldsymbol{\sum \min_{i=1}^{r}\left[\mu_{R_{pq}}(x_k,y_k),\mu_{p_m}(U)\right]} \end{aligned} \tag{20}$$

where r is the number of fuzzy rules activated by x_k and y_k and also $\mu_{\cup_{i=1}^{r} FR^i}(x_k,y_k,U)$ is a fuzzy interpretation of $i - th$ rule. Defuzzification is the last step in the fuzzy inference system which it is used to transform fuzzy set to crisp set. Consequently defuzzification's input is the aggregate output and the defuzzification's output is a crisp number. Centre of gravity method (COG) and Centre of area method (COA) are two most common defuzzification methods, which COG method used the following equation to calculate the defuzzification

$$\boldsymbol{COG(x_k,y_k)} = \frac{\boldsymbol{\sum_i U_i \sum_{j=1}^{r}.\mu_u(x_k,y_k,U_i)}}{\boldsymbol{\sum_i \sum_{j=1}^{r}.\mu_u(x_k,y_k,U_i)}} \tag{21}$$

and COA method used the following equation to calculate the defuzzification

$$\boldsymbol{COA(x_k,y_k)} = \frac{\boldsymbol{\sum_i U_i.\mu_u(x_k,y_k,U_i)}}{\boldsymbol{\sum_i \mu_U.(x_k,y_k,U_i)}} \tag{22}$$

Where $COG(x_k,y_k)$ and $COA(x_k,y_k)$ illustrates the crisp value of defuzzification output, $U_i \in U$ is discrete element of an output of the fuzzy set, $\mu_U.(x_k,y_k,U_i)$ is the fuzzy set membership function, and r is the number of fuzzy rules.

Based on foundation of fuzzy logic methodology; fuzzy logic controller has played important rule to design nonlinear controller for nonlinear and uncertain systems [12-26]. However the application area for fuzzy control is really wide, the basic form for all command types of controllers consists of:

- Input fuzzification (binary-to-fuzzy[B/F]conversion)
- Fuzzy rule base (knowledge base)

- Inference engine
- Output defuzzification (fuzzy-to-binary [F/B] conversion).

Figure 1 shows the block diagram of fuzzy logic control methodology based on two inputs and one output.

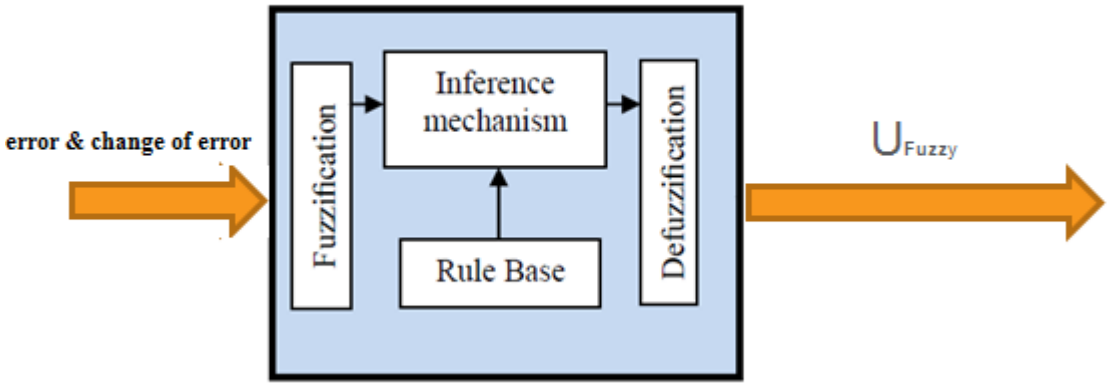

Fig. 1: Block diagram of fuzzy logic control methodology

Backstepping Theory: The continuum robot dynamics in Equations (15) and (16) have the appropriate structure for the so-called backstepping controller design method. The steps in the backstepping controller design method are outlined in Figure 2. With the position error defined as $Z_1 = X_d - X_a$, all joints will track the desired specified state X_d if the error dynamics are given as follows:

$$\left(\dot{Z}_1 + [K_p]Z_1\right) = 0 \tag{23}$$

Where $[K_p]$ is a positive definite gain matrix. The error dynamics in Equation (23) can be rewritten as:

$$X_2 = \dot{X}_d + [K_p]Z_1 \tag{24}$$

Substitution of Equation (24) into Equation (16) makes the position error dynamics go to zero. Since the state vector x_2 is not a control variable, Equation (24) cannot be directly substituted into Equation (16). The expression in Equation (24) is therefore defined as a fictitious control input and is labeled in Figure 2 and expressed below as $X_{2\,d}$.

$$X_{2_d} = \dot{X}_{1_d} + [K_p](X_d - X_a) \tag{25}$$

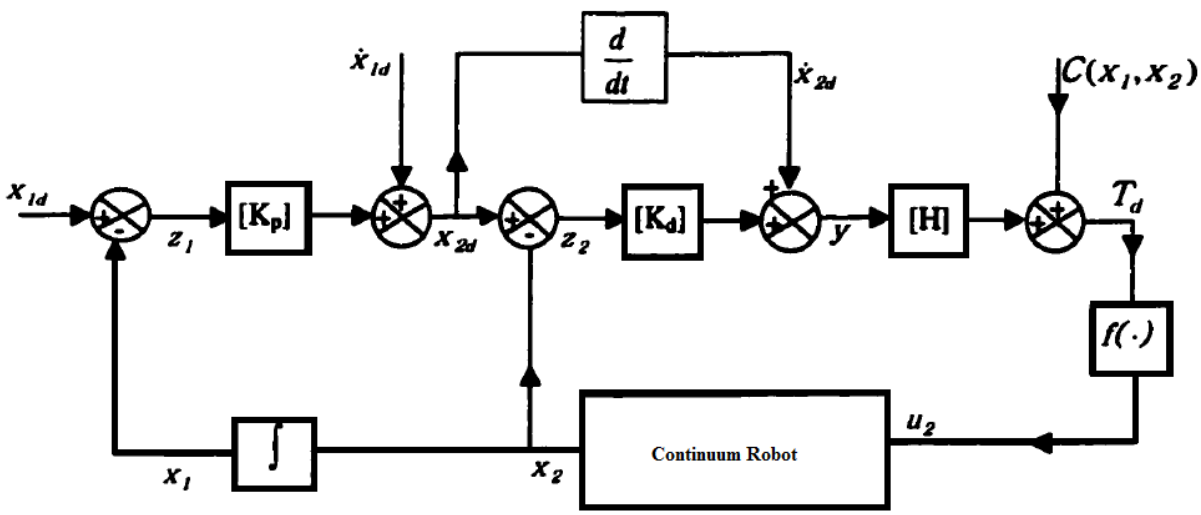

Fig. 2: Backstepping controller Block Diagram

The fictitious control input in Equation (25) is selected as the specified velocity trajectory and hence the velocity error can be defined as $Z_2 = X_{2\,d} - X_{2\,a}$. With the following dynamics

$$\left(\dot{Z}_2 + [K_p]Z_2\right) = 0 \tag{26}$$

The joint position error will approach zero asymptotically, which will lead to the eventual asymptotic convergence of the joint position error. The error dynamics in equation (26) can be rewritten as:

$$\mathbf{X_2} = \dot{\mathbf{X}}_\mathbf{d} + [\mathbf{K_p}]\mathbf{Z_2} \tag{27}$$

Substitution of Equation (26) into Equation (16) leads to the following expression as the desired stabilizing torque:

$$\boldsymbol{\tau} = [\mathbf{H}](\dot{\mathbf{X}}_{\mathbf{2d}} + [\mathbf{K_p}]\mathbf{Z_2}) + \mathbf{C}(\mathbf{X_1}, \mathbf{X_2}) \tag{28}$$

The desired torque control input is a nonlinear compensator since it depends on the dynamics of the spherical motor. The time derivative of desired velocity vector is calculated using Equation (26). In terms of the desired state trajectory, and its time derivatives and the position and velocity state variables, the desired torque can be rewritten in following form:

$$\boldsymbol{\tau} = [\mathbf{H}]\mathbf{y} + \mathbf{C}(\mathbf{X_1}, \mathbf{X_2}) \tag{29}$$

Where

$$\mathbf{y} = \ddot{\mathbf{X}}_{\mathbf{1d}} + \left([\mathbf{K_p}] + [\mathbf{K_d}]\right)\left(\dot{\mathbf{X}}_{\mathbf{1d}} - \dot{\mathbf{X}}_{\mathbf{1}}\right) + ([\mathbf{K_p}][\mathbf{K_d}]\mathbf{X_d} - \mathbf{X_a} \tag{30}$$

The backstepping controller developed above is very similar to inverse dynamics control algorithm developed for robotic manipulators. The backstepping controller is ideal from a control point of view as the nonlinear dynamics of the continuum robot are cancelled and replaced by linear subsystems. The drawback of the backstepping controller is that it requires perfect cancellation of the nonlinear continuum robot dynamics. Accurate real time representations of the robot dynamics are difficulty due to uncertainties in the system dynamics resulting from imperfect knowledge of the robot mechanical parameters; existence of unmodeled dynamics and dynamic uncertainties due to payloads. The requirement for perfect dynamic cancellation raises sensitivity and robustness issues that are addressed in the design of a robust backstepping controller. Another drawback of the backstepping controller is felt during real-time implementation of the control algorithm. Implementation of the backstepping controller requires the computation of the exact robot dynamics at each sampling time. This computational burden has an effect on the performance of the control algorithm and imposes constraints on the hardware/software architecture of the control system. By only computing the dominant parts of the robot dynamics, this computational burden can be reduced. These drawbacks of the backstepping controller makes it necessary to consider control algorithms that compensate for both model uncertainties and for approximations made during the on-line computation of robot dynamics. The next section provides robust modifications of the backstepping controller described in this section.

III. Methodology

First part in the proposed method fuzzy rule base was designed to have a nonlinear sliding surface slope function.

The fuzzy systemcan be defined as below

$$\boldsymbol{f}(\boldsymbol{x}) = \boldsymbol{\tau}_{\boldsymbol{fuzzy}} = \sum_{\boldsymbol{l=1}}^{\boldsymbol{M}} \boldsymbol{\theta}^{\boldsymbol{T}}\, \boldsymbol{\zeta}(\boldsymbol{x}) = \boldsymbol{\psi}(\boldsymbol{e}, \dot{\boldsymbol{e}}) \tag{31}$$

where $\theta = (\theta^1, \theta^2, \theta^3, \dots\dots, \theta^M)^T, \zeta(x) = (\zeta^1(x), \zeta^2(x), \zeta^3(x), \dots\dots, \zeta^M(x))^T$ \

$$\boldsymbol{\zeta}^{\mathbf{1}}(\boldsymbol{x}) = \frac{\sum_i \boldsymbol{\mu}_{(xi)x_i}}{\sum_i \boldsymbol{\mu}_{(xi)}} \tag{32}$$

where $\theta = (\theta^1, \theta^2, \theta^3, \dots\dots, \theta^M)$ is adjustable parameter in (31) and $\mu_{(xi)}$ is membership function.
error base fuzzy controller can be defined as

$$\boldsymbol{\tau}_{\boldsymbol{fuzzy}} = \boldsymbol{\psi}(\boldsymbol{e}, \dot{\boldsymbol{e}}) \tag{33}$$

To eliminate the chattering fuzzy inference system is used instead of saturation and/or switching function. Design a nonlinear sliding function has five steps:

1. **Determine inputs and outputs:** This controller has one input (S) and one output (α). The input is sliding function (S) and the output is coefficient which estimate the saturation function (α).
2. **Find membership function and linguistic variable:** The linguistic variables for sliding surface (S) are; Negative Big (NB), Negative Medium (NM), Negative Small (NS), Zero (Z), Positive Small (PS), Positive Medium (PM), Positive Big (PB), and the linguistic variables to find the saturation coefficient (α) are; Large Left (LL), Medium Left (ML), Small Left (SL), Zero (Z), Small Right (SR), Medium Right (MR), Large Right (LR).
3. **Choice of shape of membership function:** In this work triangular membership function was selected.
4. **Design fuzzy rule table:** design the rule base of fuzzy logic controller can play important role to design best performance for proposed method, suppose that two fuzzy rules in this controller are

$$\begin{aligned} &\mathbf{F.R^1}\mathbf{:}\ \textit{IF S is Z, THEN } \alpha \textit{ is Z.} \\ &\mathbf{F.R^2}\mathbf{:}\ \textit{IF S is (PB) THEN } \alpha \textit{ is (LR).} \end{aligned} \tag{34}$$

The complete rule base for this controller is shown in Table 1.

Table 1: Rule table for proposed method

S	NB	NM	NS	Z	PS	PM	PB
τ	LL	ML	SL	Z	SR	MR	LR

The control strategy that deduced by Table1 are

- If sliding surface (S) is N.B, the control applied is N.B for moving S to S=0.
- If sliding surface (S) is Z, the control applied is Z for moving S to S=0.

5. **Defuzzification**: The final step to design fuzzy logic controller is deffuzification, there are many deffuzzification methods in the literature, in this controller the COG method will be used, where this is given by

$$\boldsymbol{COG(x_k, y_k) = \frac{\sum_i U_i \sum_{j=1}^{r} \mu_u(x_k, y_k, U_i)}{\sum_i \sum_{j=1}^{r} \mu_u(x_k, y_k, U_i)}} \quad \textbf{(35)}$$

$$\boldsymbol{if\ S = 0\ then\ \dot{-}e = \lambda e} \quad \textbf{(36)}$$

The fuzzy division can be reached the best state when $S.\dot{S} < 0$ and the error is minimum by the following formulation

$$\boldsymbol{\theta^* = \arg\min[Sup_{x\in U} |\ \sum_{l=1}^{M} \theta^T \zeta(x) - \tau_{equ}|]} \quad \textbf{(37)}$$

Where θ^* is the minimum error, $sup_{x\in U}|\sum_{l=1}^{M} \theta^T \zeta(x) - \tau_{equ}|$ is the minimum approximation error. Figure 3 shows the fuzzy instead of saturation function.

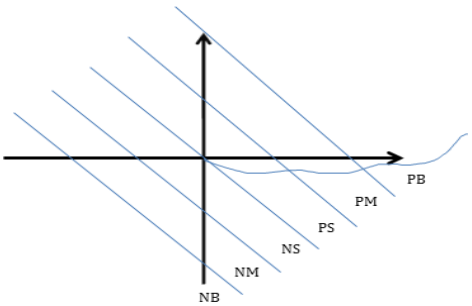

Fig. 3: Nonlinear fuzzy inference system instead of saturation function

Second step is focused on design SISO fuzzy estimation backstepping adaptive variable structure based on Lyapunov formulation. The firs type of fuzzy systems is given by

$$\boldsymbol{f(x) = \sum_{l=1}^{M} \theta^l \mathcal{E}^l(x) = \theta^T \mathcal{E}(x)} \quad \textbf{(38)}$$

Where $\theta = (\theta^1, \dots, \theta^M)^T, \mathcal{E}(x) = (\mathcal{E}^1(x), \dots, \mathcal{E}^M(x))^T$, *and* $\mathcal{E}^l(x) = : \prod_{i=1}^{n} \frac{\mu_{A_i^l}(x_i)}{\sum_{l=1}^{M}(\prod_{i=1}^{n} \mu_{A_i^l}(x_i))}$. $\theta^1, \dots, \theta^M$ are adjustable parameters in (28). $\mu_{A_1^1}(x_1), \dots, \mu_{A_n^m}(x_n)$ are given membership functions whose parameters will not change over time.

The second type of fuzzy systems is given by

$$\boldsymbol{f(x) = \frac{\sum_{l=1}^{M} \theta^l \left[\prod_{i=1}^{n} \exp\left(-\left(\frac{x_i - \alpha_i^l}{\delta_i^l}\right)^2\right)\right]}{\sum_{l=1}^{M} \left[\prod_{i=1}^{n} \exp\left(-\left(\frac{x_i - \alpha_i^l}{\delta_i^l}\right)^2\right)\right]}} \quad \textbf{(39)}$$

Where θ^l ,α_i^l *and* δ_i^l are all adjustable parameters. From the universal approximation theorem, we know that we can find a fuzzy system to estimate any continuous function. For the first type of fuzzy systems, we can only adjust θ^l in (28). We define $f^\wedge(x|\theta)$ as the approximator of the real function $f(x)$.

$$\boldsymbol{f^\wedge(x|\theta) = \theta^T \varepsilon(x)} \quad \textbf{(40)}$$

We define θ^* as the values for the minimum error:

$$\boldsymbol{\theta^* = \arg\min_{\theta\in\Omega} \left[\sup_{x\in U} |f^\wedge(x|\theta) - g(x)|\right]} \quad \textbf{(41)}$$

Where Ω is a constraint set for θ. For specific x ,$sup_{x\in U}|f^\wedge(x|\theta^*) - f(x)|$ is the minimum approximation error we can get.

We used the first type of fuzzy systems (28) to estimate the nonlinear system (11) the fuzzy formulation can be write as below;

$$\boldsymbol{f(x|\theta) = \theta^T \varepsilon(x) = \frac{\sum_{l=1}^{n} \theta^l [\mu_{A^l}(x)]}{\sum_{l=1}^{n} [\mu_{A^l}(x)]}} \quad \textbf{(42)}$$

Where $\theta^1, \dots, \theta^n$ are adjusted by an adaptation law. The adaptation law is designed to minimize the parameter errors of $\theta - \theta^*$. A MIMO (multi-input multi-output) fuzzy system is designed to compensate the uncertainties of the nonlinear system. The parameters of the fuzzy system are adjusted by adaptation laws. The tracking error and the sliding surface state are defined as:

$$\boldsymbol{e = q - q_d} \quad \textbf{(43)}$$

$$\boldsymbol{s = \dot{e} + \lambda_e} \quad \textbf{(44)}$$

We define the reference state as

$$\boldsymbol{\dot{q}_r = \dot{q} - s = \dot{q}_d - \lambda e} \quad \textbf{(45)}$$

$$\boldsymbol{\ddot{q}_r = \ddot{q} - \dot{s} = \ddot{q}_d - \lambda \dot{e}} \quad \textbf{(46)}$$

The general MIMO if-then rules are given by

$$\boldsymbol{R^l: if\ x_1\ is\ A_1^l\ , x_2\ is\ A_2^l\ , \dots , x_n\ is\ A_n^l\ ,\ then\ y_1 is\ B_1^l\ , \dots , y_m\ is\ B_m^l} \quad \textbf{(47)}$$

Where $l = 1,2, \dots , M$ are fuzzy if-then rules; $x = (x_1, \dots , x_n)^T$ and $y = (y_1, \dots , y_n)^T$ are the input and output vectors of the fuzzy system. The MIMO fuzzy systemis define as

$$\boldsymbol{f(x) = \ominus^T \varepsilon(x)} \quad \textbf{(48)}$$

Third step is focused on design Mamdani's fuzzy backstepping adaptive fuzzy estimator variable structure. As mentioned above pure variable structure controller has nonlinear dynamic equivalent limitations in presence of uncertainty and external disturbances in order to solve these challenges this work applied Mamdani's fuzzy inference engine estimator in variable structure controller (SMC). However proposed MIMO fuzzy estimator variable structure has satisfactory performance but calculate the variable structure surface slope by try and error or experience knowledge is very difficult, particularly when system has structure or unstructured uncertainties; SISO Mamdani's fuzzy backstepping variable structure function fuzzy estimator variable structure controller is recommended. The backstepping method is based on mathematical formulation which this method is introduced new variables into it in form depending on the dynamic equation of robot arm. This method is used as feedback linearization in order to solve nonlinearities in the system. To use of nonlinear fuzzy filter this method in this research makes it possible to create dynamic nonlinear backstepping estimator into the adaptive fuzzy estimator variable structure process to eliminate or reduce the challenge of uncertainty in this part. The backstepping controller is calculated by;

$$\boldsymbol{U_{B.S} = U_{eq_{B.S}} + D.I} \quad \textbf{(49)}$$

Where $\boldsymbol{U_{B.S}}$ is backstepping output function, $\boldsymbol{U_{eq_{B.S}}}$ is backstepping nonlinear equivalent function which can be written as (49) and $\boldsymbol{I}$ is backstepping control law which calculated by (50)

$$\boldsymbol{U_{eq_{B.S}} = [f + C + G]} \quad \textbf{(50)}$$

We have

$$\boldsymbol{I = \left[\ddot{\theta} + K_1(K_1 - 1) \cdot e + (K_1 + K_2) \cdot \dot{e}\right]} \quad \textbf{(51)}$$

Based on (11) and (49) the fuzzy backstepping filter is considered as

$$\boldsymbol{(f + C + G) = \sum_{l=1}^{M} \theta^T \zeta(x) - \lambda S - K} \quad \textbf{(52)}$$

Based on (44) the formulation of fuzzy backstepping filter can be written as;

$$\boldsymbol{U = U_{eqB.S_{fuzzy}} + MI} \quad \textbf{(53)}$$

Where
$\boldsymbol{U_{eq_{B.Sfuzzy}} = [(B + C + G)] + \sum_{l=1}^{M} \theta^T \zeta(x) + K}$

The adaption low is defined as

$$\boldsymbol{\dot{\theta}_j = \gamma_{sj} S_j \zeta_j(S_j)} \quad \textbf{(54)}$$

where the γ_{sj} is the positive constant and $\zeta_j(S_j) = [\zeta_j^1(S_j), \zeta_j^2(S_j), \zeta_j^3(S_j), \dots \dots , \zeta_j^M(S_j)]^T$

$$\boldsymbol{\zeta_j^1(S_j) = \frac{\mu_{(A)}{}_j^l(S_j)}{\sum_i \mu_{(A)}{}_j^l(S_j)}} \quad \textbf{(55)}$$

The dynamic equation of continuum robot manipulator can be written based on the variable structure surface as;

$$\boldsymbol{M\dot{S} = -VS + M\dot{S} + VS} \quad \textbf{(56)}$$

It is supposed that

$$\boldsymbol{S^T(\dot{D} - 2V)S = 0} \quad \textbf{(57)}$$

For continuous function $\boldsymbol{U_{eqB.S_{fuzzy}}}$ and suppose $\varepsilon > 0$ it is defined the fuzzy backstepping controller in form of (49) such that

$$\boldsymbol{Sup_{x \in U} \left| U_{eqB.S_{fuzzy}} + DI \right|} < \epsilon \quad \textbf{(58)}$$

As a result MIMO fuzzy backstepping adaptive fuzzy estimation variable structure is very stable which it is one of the most important challenges to design a controller with suitable response.

IV. Results

Variable structure controller (SMC) and proposed SISO fuzzy backstepping adaptive fuzzy estimator variable structure controller (proposed method) were tested to the response trajectory. The simulation was implemented in MATLAB/SIMULINK environment. Links trajectory and disturbance rejection are compared in these controllers. It is noted that, these systems are tested by band limited white noise with a predefined 40% of relative to the input signal amplitude. This type of noise is used to external disturbance in continuous and hybrid systems.

System Position Trajectory: Figure 4 shows the final position trajectory in SMC and proposed controller without changes in system dynamics and external disturbance.

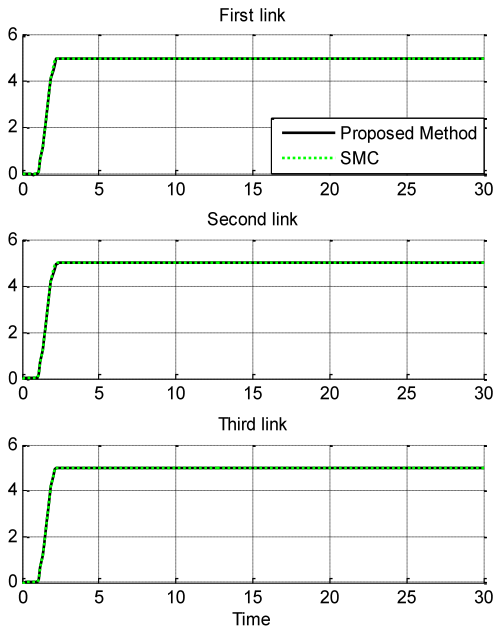

Fig. 4: SMC vs. Proposed controller to adjust pose

By comparing controllers' response, Figure 4, in SMC and proposed controller, both of these controllers have about the same performance.

Torque Load Rejection: Figure 5 is indicated the power torque load removal in SMC and proposed controller. Besides a band limited white torque lode with predefined of 40% the power of signal is applied to the SMC and proposed controller; it found slight oscillations in SMC trajectory responses.

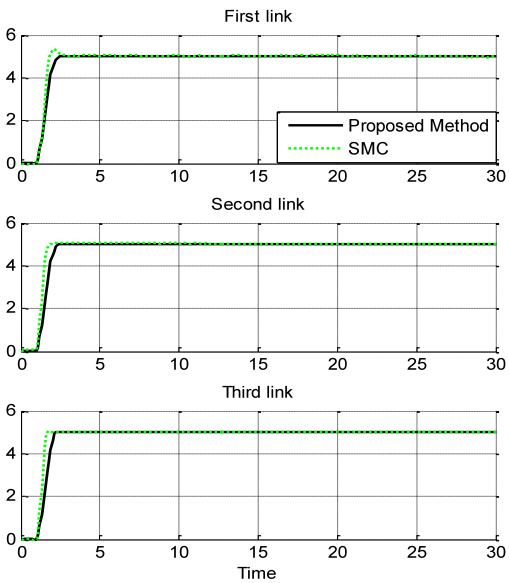

Fig. 5: SMC vs. Proposed controller trajectory: with variant torque load

Among above graph, relating to variable trajectory following with external disturbance, SMC has slightly fluctuations. By comparing overshoot; proposed controller's overshoot **(0%)** is lower than VSC's **(16%).**

V. Conclusion

Refer to the research, a Lyapunov based SISO fuzzy backstepping adaptive fuzzy estimator variable structure controller design and application to continuum robot has proposed in order to design high performance nonlinear controller in the presence of uncertainties. Regarding to the positive points in variable structure controller, fuzzy inference system and adaptive fuzzy backstepping methodology it is found that the adaptation laws derived in the Lyapunov sense. The stability of the closed-loop system is proved mathematically based on the Lyapunov method. To remove the chattering linear boundary layer method is used. To compensate the model uncertainty, SISO fuzzy inference system is applied to VSC. To reduce or eliminate the chattering nonlinear fuzzy sliding surface function is introduce. Finally, fuzzy backstepping methodology with minimum rule base is used to online tuning and adjusted the fuzzy variable structure method and eliminates the chattering with minimum computational load. In this case the performance is improved based on the advantages of variable structure, artificial intelligence compensate method and adaptive algorithm while the disadvantages removed by added each method to previous method.

Acknowledgment

The authors would like to thank the anonymous reviewers for their careful reading of this paper. This work was supported by the SSP Research and Development Corporation Program of Iran under grant no. 2012-Persian Gulf-4B.

References

[1] G. Robinson, and J. Davies, "Continuum robots – a state of the art,"Proc. IEEE International Conference on Robotics and Automation, Detroit, MI, 1999, vol. 4, pp. 2849-2854.

[2] I.D. Walker, D. Dawson, T. Flash, F. Grasso, R. Hanlon, B. Hochner, W.M. Kier, C. Pagano,C.D. Rahn, Q. Zhang, "Continuum Robot Arms Inspired by Cephalopods, Proceedings SPIE Conference on Unmanned Ground Vehicle Technology VII, Orlando, FL, pp 303-314, 2005.

[3] K. Suzumori, S. Iikura, and H. Tanaka, "Development of Flexible Microactuator and it's Applications to Robotic Mechanisms", Proceedings IEEE International Conference on Robotics and Automation, Sacramento, California, pp. 1622-1627, 1991.

[4] D. Trivedi, C.D. Rahn, W.M. Kier, and I.D. Walker, "Soft Robotics: Biological Inspiration, State of the Art, and Future Research", Applied Bionics and Biomechanics, 5(2), pp. 99-117, 2008.

[5] W. McMahan, M. Pritts, V. Chitrakaran, D. Dienno, M. Grissom, B. Jones, M. Csencsits, C.D. Rahn, D. Dawson, and I.D. Walker, "Field Trials and Testing of "OCTARM" Continuum Robots", Proc. IEEE International Conference on Robotics and Automation, pp. 2336-2341, 2006.

[6] W. McMahan, I.D. Walker, "Octopus-Inspired Grasp Synergies for Continuum Manipulators", Proc. IEEE International Conference on Robotics and Biomimetics, pp. 945- 950, 2009.

[7] Farzin Piltan, Shahnaz Tayebi Haghighi " Design Gradient Descent Optimal Sliding Mode Control of Continuum Robots", IAES International journal of Robotics and Automation (IAES-IJRA) , 1(4):175-189, 2012.

[8] M. Bazregar, Farzin Piltan, A. Nabaee and M.M. Ebrahimi, "Parallel Soft Computing Control Optimization Algorithm for Uncertainty Dynamic Systems", International Journal of Advanced Science and Technology, 51, 2013.

[9] Farzin Piltan, M.H. Yarmahmoudi, M. Mirzaei, S. Emamzadeh, Z. Hivand, "Design Novel Fuzzy Robust Feedback Linearization Control with Application to Robot Manipulator", International Journal of Intelligent Systems and Applications, 5(5), 2013.

[10] Sh. Tayebi Haghighi, S. Soltani, Farzin Piltan, M. kamgari, S. Zare, "Evaluation Performance of IC Engine: Linear Tunable Gain Computed Torque Controller Vs. Sliding Mode Controller", International Journal of Intelligent Systems and Applications, 5(6), 2013.

[11] A. Jalali, Farzin Piltan, M. Keshtgar, M. Jalali, "Colonial Competitive Optimization Sliding Mode Controller with Application to Robot Manipulator", International Journal of Intelligent Systems and Applications, 5(7), 2013.

[12] A. Salehi, Farzin Piltan, M. Mousavi, A. Khajeh, M. R. Rashidian, "Intelligent Robust Feed-forward Fuzzy Feedback Linearization Estimation of PID Control with Application to Continuum Robot", International Journal of Information Engineering and Electronic Business, 5(1), 2013.

[13] Farzin Piltan, M.J. Rafaati, F. Khazaeni, A. Hosainpour, S. Soltani, "A Design High Impact Lyapunov Fuzzy PD-Plus-Gravity Controller with Application to Rigid Manipulator", International Journal of Information Engineering and Electronic Business, 5(1), 2013.

[14] A. Jalali, Farzin Piltan, A. Gavahian, M. Jalali, M. Adibi, "Model-Free Adaptive Fuzzy Sliding Mode Controller Optimized by Particle Swarm for Robot manipulator", International Journal of Information Engineering and Electronic Business, 5(1), 2013.

[15] Farzin Piltan, M.A. Bairami, F. Aghayari, M.R. Rashidian, "Stable Fuzzy PD Control with Parallel Sliding Mode Compensation with Application to Rigid Manipulator", International Journal of Information Technology and Computer Science, 5(7), 2013.

[16] Farzin Piltan, S. Emamzadeh, Z. Hivand, F. Shahriyari & Mina Mirazaei. " PUMA-560 Robot Manipulator Position Sliding Mode Control Methods Using MATLAB/SIMULINK and Their Integration into Graduate/Undergraduate Nonlinear Control, Robotics and MATLAB Courses", International Journal of Robotics and Automation, 3(3):106-150, 2012.

[17] Farzin Piltan, A. Hosainpour, E. Mazlomian, M.Shamsodini, M.H Yarmahmoudi. "Online Tuning Chattering Free Sliding Mode Fuzzy Control Design: Lyapunov Approach", International Journal of Robotics and Automation, 3(3):77-105, 2012.

[18] Farzin Piltan, R. Bayat, F. Aghayari, B. Boroomand. "Design Error-Based Linear Model-Free Evaluation Performance Computed Torque Controller", International Journal of Robotics and Automation, 3(3):151-166, 2012.

[19] Farzin Piltan, J. Meigolinedjad, S. Mehrara, S. Rahmdel. "Evaluation Performance of 2nd Order Nonlinear System: Baseline Control Tunable Gain Sliding Mode Methodology", International Journal of Robotics and Automation, 3(3): 192-211, 2012.

[20] Farzin Piltan, Mina Mirzaei, Forouzan Shahriari, Iman Nazari, Sara Emamzadeh, "Design Baseline Computed Torque Controller", International Journal of Engineering, 6(3): 129-141, 2012.

[21] Farzin Piltan, Sajad Rahmdel, Saleh Mehrara, Reza Bayat, "Sliding Mode Methodology Vs. Computed Torque Methodology Using MATLAB/SIMULINK and Their Integration into Graduate Nonlinear Control Courses" , International Journal of Engineering, 6(3): 142-177, 2012.

[22] Farzin Piltan, M.H. Yarmahmoudi, M. Shamsodini, E.Mazlomian, A.Hosainpour. "PUMA-560 Robot Manipulator Position Computed Torque Control Methods Using MATLAB/SIMULINK and Their Integration into Graduate Nonlinear Control and MATLAB Courses", International Journal of Robotics and Automation, 3(3): 167-191, 2012.

[23] Farzin Piltan, Hossein Rezaie, Bamdad Boroomand, Arman Jahed. "Design Robust Backstepping on-line Tuning Feedback Linearization Control Applied to IC Engine",

International Journal of Advance Science and Technology, 11:40-22, 2012.

[24] Farzin Piltan, S. Siamak, M.A. Bairami and I. Nazari."Gradient Descent Optimal Chattering Free Sliding Mode Fuzzy Control Design: Lyapunov Approach", International Journal of Advanced Science and Technology, 43: 73-90, 2012.

[25] Farzin Piltan, M.R. Rashidian, M. Shamsodini and S. Allahdadi. " Effect of Rule Base on the Fuzzy-Based Tuning Fuzzy Sliding Mode Controller: Applied to 2nd Order Nonlinear System", International Journal of Advanced Science and Technology, 46:39-70, 2012.

[26] Farzin Piltan, A. Jahed, H. Rezaie and B. Boroomand."Methodology of Robust Linear On-line High Speed Tuning for Stable Sliding Mode Controller: Applied to Nonlinear System", International Journal of Control and Automation, 5(3): 217-236, 2012.

[27] Farzin Piltan, R. Bayat, S. Mehara and J. Meigolinedjad."GDO Artificial Intelligence-Based Switching PID Baseline Feedback Linearization Method: Controlled PUMA Workspace", International Journal of Information Engineering and Electronic Business, 5: 17-26, 2012.

[28] Farzin Piltan, B. Boroomand, A. Jahed and H. Rezaie."Performance-Based Adaptive Gradient Descent Optimal Coefficient Fuzzy Sliding Mode Methodology", International Journal of Intelligent Systems and Applications, 11: 40-52 2012.

[29] Farzin Piltan, S. Mehrara, R. Bayat and S. Rahmdel. " Design New Control Methodology of Industrial Robot Manipulator: Sliding Mode Baseline Methodology", International Journal of Hybrid Information Technology, 5(4):41-54, 2012.

[30] Farzin Piltan, Shahnaz Tayebi Haghighi, "Design Gradient Descent Optimal Sliding Mode Control of Continuum Robots", International Journal of Robotics and Automation, 1(4): 175-189, 2012.

[31] Farzin Piltan, N. Sulaiman, Amin Jalali & Koorosh Aslansefat, "Evolutionary Design of Mathematical tunable FPGA Based MIMO Fuzzy Estimator Sliding Mode Based Lyapunov Algorithm: Applied to Robot Manipulator", International Journal of Robotics and Automation, 2 (5):317-343, 2011.

[32] Farzin Piltan, N. Sulaiman, Abbas Zare, Mohammadali Dialame & Sadeq Allahdadi, "Design Adaptive Fuzzy Inference Sliding Mode Algorithm: Applied to Robot Arm", International Journal of Robotics and Automation,3 (1):283-297, 2011.

[33] Farzin Piltan, N. Sulaiman, Samaneh Roosta, Atefeh Gavahian & Samira Soltani, "Evolutionary Design of Backstepping Artificial Sliding Mode Based Position Algorithm: Applied to Robot Manipulator", International Journal of Engineering, 5 (5):419-434, 2011.

[34] Farzin Piltan, N. Sulaiman, Amin Jalali, Sobhan Siamak & Iman Nazari, "Control of Robot Manipulator: Design a Novel Tuning MIMO Fuzzy Backstepping Adaptive Based Fuzzy Estimator Variable Structure Control", International Journal of Control and Automation, 4 (4):91-110, 2011.

[35] Farzin Piltan, N. Sulaiman, Atefeh Gavahian, Samaneh Roosta & Samira Soltani, "On line Tuning Premise and Consequence FIS: Design Fuzzy Adaptive Fuzzy Sliding Mode Controller Based on Lyaponuv Theory", International Journal of Robotics and Automation, 2 (5):381-400, 2011.

[36] Farzin Piltan, N. Sulaiman, Samira Soltani, Samaneh Roosta & Atefeh Gavahian, "Artificial Chattering Free on-line Fuzzy Sliding Mode Algorithm for Uncertain System: Applied in Robot Manipulator", International Journal of Engineering, 5 (5):360-379, 2011.

[37] Farzin Piltan, A. Nabaee, M.M. Ebrahimi and M. Bazregar, "Design robust fuzzy sliding mode control technique for robot manipulator systems with modeling uncertainties", I. J. Information Technology and Computer Science, 5(8): 123-135, 2013.

[38] M. M. Ebrahimit Farzin Piltan, M. Bazregar and A.R. Nabaee "Intelligent Robust Fuzzy-Parallel Optimization Control of a Continuum Robot Manipulator", International Journal of Control and Automation, 6(3), 2013.

Authors' Profiles

Samaneh Zahmatkesh is an Electrical engineer researcher of research and development company SSP. Co. She is an expert artificial intelligence and expert systems in this company. Her research activities deal with the robotic control, artificial intelligence and expert system.

Farzin Piltan was born on 1975, Shiraz, Iran. In 2004 he is jointed the research and development company, SSP Co, Shiraz, Iran. In addition to 7 textbooks, Farzin Piltan is the main author of more than 80 scientific papers in refereed journals. He is editorial board of international journal of control and automation (IJCA), editorial board of International Journal of Intelligent System and

Applications (IJISA), editorial board of IAES international journal of robotics and automation, editorial board of International Journal of Reconfigurable and Embedded Systems and reviewer of (CSC) international journal of robotics and automation. His main areas of research interests are nonlinear control, artificial control system and applied to FPGA, robotics and artificial nonlinear control and IC engine modelling and control.

Kamran Heidari is a researcher of research and development company SSP. Co. His research activities deal with the robotic control, artificial intelligence and expert system.

Mohammad Shamsodini is an electrical Electronic researcher in research and development company SSP. Co. His main areas of research interests are nonlinear control, artificial control system and robotics.

Sara Heidari is a mathematical researcher of research and development company SSP. Co. She is an expert artificial intelligence and expert systems in this company. Her research activities deal with the robotic control, artificial intelligence and expert system.

How to cite this paper: Samaneh Zahmatkesh, Farzin Piltan, Kamran Heidari, Mohammad Shamsodini, Sara Heidari,"Artificial Error Tuning Based on Design a Novel SISO Fuzzy Backstepping Adaptive Variable Structure Control", International Journal of Intelligent Systems and Applications(IJISA), vol.5, no.11, pp.34-46, 2013. DOI: 10.5815/ijisa.2013.11.04